5I-80R.PCB

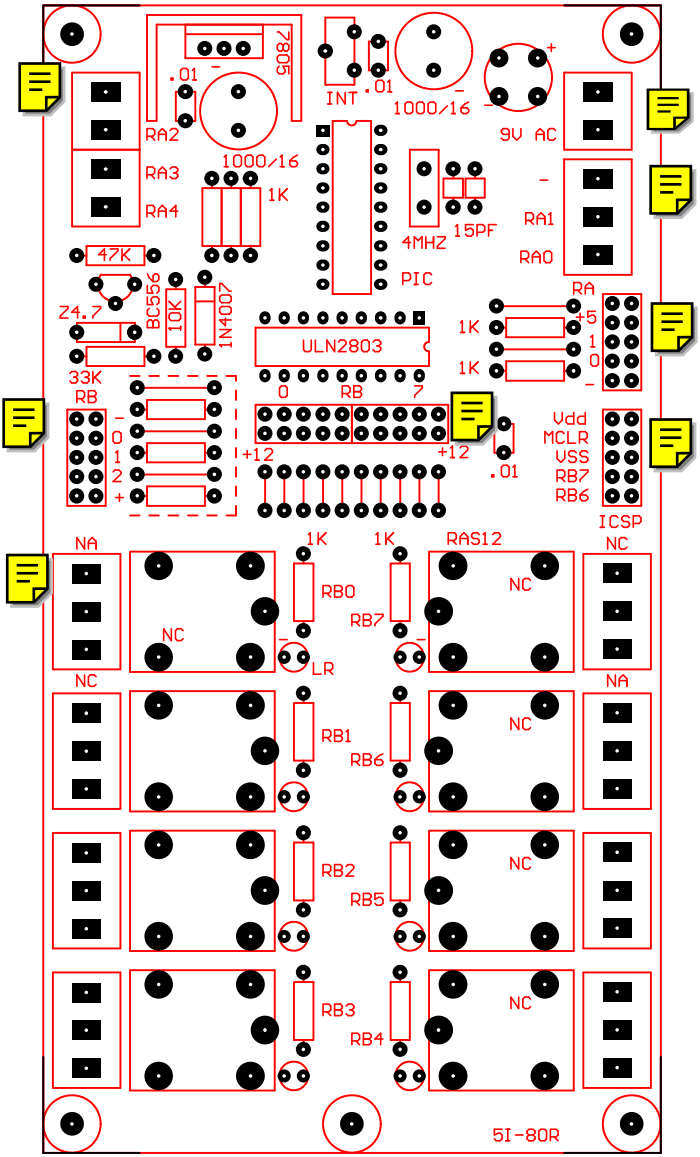
7805
.01
INT
.01
1000/16
9V AC
RA2
RA3
RA4
1000/16
1K
4MHZ
15PF
RA1
RA0
47K
Z4.7
BC556
10K
1N4007
PIC
RA
+5
1
0
1K
1K
ULN2803
33K
RB
0
1
2
0
RB
7
+12
+12
.01
Vdd
MCLR
VSS
RB7
RB6
ICSP
NA
1K
1K
RAS12
NC
RB0
RB7
NC
NC
LR
NC
NA
RB1
RB6
NC
RB2
RB5
NC
RB3
RB4
NC
5I-80R

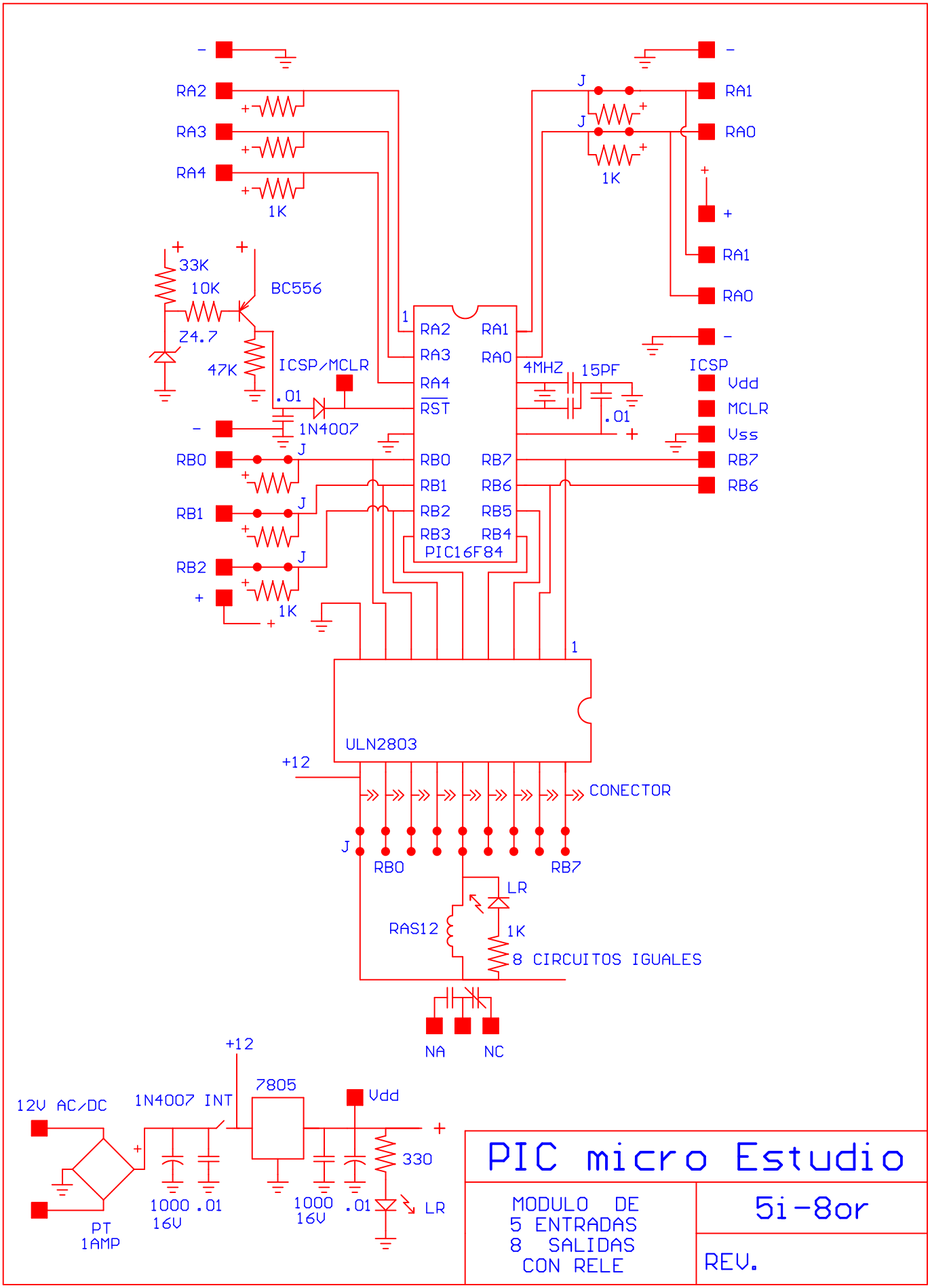
RA2
RA3
RA4
1K
33K
10K
BC556
Z4.7
47K
ICSP/MCLR
.01
1N4007
RB0
RB1
RB2
1K
RA2
RA3
RA4
RST
RA1
RA0
RB0
RB1
RB2
RB3
RB7
RB6
RB5
RB4
PIC16F84
4MHZ
15PF
.01
RA1
RA0
1K
RA1
RA0
ICSP
Vdd
MCLR
Vss
RB7
RB6
ULN2803
+12
CONECTOR
RB0
RB7
LR
RAS12
1K
8 CIRCUITOS IGUALES
NA
NC
12V AC/DC
PT
1AMP
1N4007 INT
+12
7805
Vdd
1000
16V
.01
1000
16V
.01
330
LR
PIC micro Estudio
MODULO DE
5 ENTRADAS
8 SALIDAS
CON RELE
5i-8or
REV.